Mitochondria — To Be or Not To Be

Dr. Yves J. Hilpisch[1]

August 30, 2026 (work in progress)

Abstract

Mitochondria are the cell's primary energy transducers, turning oxygen and substrates into adenosine triphosphate (ATP) and heat. This article surveys how mitochondrial function shapes human physical and mental performance, drawing on foundational work in bioenergetics and exercise physiology, and then organises proven interventions—from aerobic and resistance training to nutrition, sleep, and temperature exposure—into a practical, safety-aware framework. Throughout, the focus is on translating mechanistic insights into realistic routines while highlighting limits of current evidence and the necessity of medical supervision in clinical or high-risk contexts.

[1]Get in touch: `https://linktr.ee/dyjh`. Web page: `https://hilpisch.com`. Research, structuring, drafting, and visualizations were assisted by different LLMs as co-writing tools under human direction. Comments and feedback are welcome.

Contents

1 Introduction and Audience **2**

2 Mitochondria: A Brief Theory Refresher **4**
2.1 Structure, Function, and Bioenergetic Basics 4
2.2 Mitochondria Across Tissues and Lifespan 6

3 Mitochondria and Physical Performance **8**
3.1 Endurance Capacity and Fatigue 8
3.2 Strength, Power, and Recovery 8

4 Mitochondria and Mental Performance **9**
4.1 Energy Demands of the Brain 9
4.2 Mitochria, Mood, and Stress Resilience 10

5 Evidence-Based Ways to Enhance Mitochondrial Function **11**
5.1 Exercise: Aerobic, Interval, and Strength Training 11
5.2 Nutrition and Metabolic Flexibility 12
5.3 Supplementation and Mitochondrial Support 13
5.4 Sleep, Circadian Rhythms, and Stress Regulation 14
5.5 Temperature Exposure and Other Emerging Tools 14
5.6 Putting It Together: Example Weekly Plans 15

6 Safeguards, Edge Cases, and Professional Support **17**

7 Roadmap, Outlook, and Research Gaps **19**

Glossary and Acronyms **20**

8 Disclaimer **21**

1 Introduction and Audience

Mitochondria turn oxygen and nutrients into the adenosine triphosphate (ATP) that powers almost every process in the human body, from muscle contraction to synaptic signalling.[1, 3] When these microscopic "power plants" work well, physical and mental performance feel robust; when they are impaired, people experience disproportionate fatigue, exercise intolerance, and difficulties with focus or mood. Yet outside specialist textbooks, mitochondrial biology is rarely translated into the everyday decisions that shape training, nutrition, and recovery.

This article is written for you if you want that translation without having to wade through biochemical derivations. The goal is not to promise miracle "mitochondrial hacks", but to give you a clear, rigorous mental model of how mitochondria work, how they adapt, and which levers are best supported by evidence if you want to support them.

Quick audience map:

- **Primary readers:** Health-conscious adults and athletes who want an intuitive, science-based understanding of mitochondria and realistic, evidence-backed ways to improve energy and resilience—if this describes you, most of the examples and prescriptions are written with you in mind.
- **Mentors and supporters:** Coaches, personal trainers, physicians, psychologists, and physiotherapists who help others change exercise, sleep, or nutrition routines and want a compact reference they can share and adapt.
- **Edge cases:** Readers living with chronic disease, complex medication regimens, or severe fatigue who need orientation and questions to bring to their clinical team, not recipes for self-experimentation.

Medical and Safety Disclaimer

Key safety boundaries for you are summarised here before any specific recommendations.

- This article is educational in nature. It does not replace personalised medical advice, diagnosis, or treatment from a licensed professional.
- Major changes in exercise, fasting routines, dietary supplements, or temperature exposure should be discussed with a physician or appropriately qualified clinician, especially in the presence of cardiovascular, metabolic, neurological, or psychiatric conditions.
- Warning signs such as chest pain, severe or rapidly worsening shortness of breath, syncope (fainting), new or rapidly changing neurological symptoms, or suicidal thoughts require immediate professional evaluation and, where appropriate, emergency care.

From a high level, mitochondrial biology sits at the intersection of three familiar questions:

- Why do some people feel they have "another gear"—on a hike, in a board meeting, or during a stressful week—while others hit an invisible wall much earlier?
- Why does structured training make such a difference to stamina, cognitive sharpness, and mood over months and years, even when weight or appearance change only modestly?
- Why do ageing, chronic metabolic disease, and long-term stress so often show up first as disproportionate tiredness and slower recovery from both physical and mental effort?

In modern bioenergetics, mitochondria are a large part of the answer.[3] They do not act alone—cardiovascular function, hormones, and the nervous system all matter—but they are a central bottleneck for how much useful work a given amount of oxygen and substrate can support. The rest of this article is organised to make that bottleneck concrete and trainable.

After a short theory refresher in Section 2, we connect mitochondrial function to physical performance (Section 3) and mental performance (Section 4). We then build a practical framework for evidence-based interventions in Section 5, covering exercise, nutrition, sleep and circadian rhythms, stress regulation, temperature exposure, and a cautious look at supplements. Section 6 gathers caveats and red flags, and Section 7 closes with a roadmap and research outlook.

Throughout, we will keep two commitments. First, we spell out acronyms when they appear and link mechanistic claims to the underlying literature where possible. Second, we continually translate those mechanisms back into simple decisions: how you move, eat, sleep, manage stress, and when you should seek professional help rather than pushing harder on your own.

Quick-Start Summary: If You Read Nothing Else

You can think of the rest of the paper as justification for a small set of habits:

- Move most days: accumulate at least 150 minutes per week of moderate activity such as brisk walking, plus two short resistance sessions that cover major movement patterns.
- Protect sleep: give yourself 7–9 hours in bed on most nights, with a regular wake time and a wind-down routine that avoids bright light and heavy meals late in the evening.
- Eat like you want to train tomorrow: centre meals on protein, colourful plants, and minimally processed staples, and avoid extreme restriction unless you are working with a clinician.
- Tame chronic stress: build brief recovery practices into your days—slow breaths, short walks, time with people you like—rather than waiting for long holidays to reset you.
- Use temperature and supplements sparingly: treat cold, heat, and pills as optional extras layered onto the foundations, not substitutes for them.
- Pay attention to warning signs: if new chest pain, severe breathlessness, fainting, or dramatic mood changes appear, pause experiments and seek medical advice.

If you implement only these principles, gradually and safely, you will already be doing most of what current evidence suggests for long-term mitochondrial health.

Self-Assessment: Where Are You Starting From?

Before you change anything, take a quiet five minutes to sketch your current baseline. You do not need to calculate a score; the value lies in seeing patterns on paper.

- **Movement:** On a typical week, how many days do you accumulate at least 20 minutes of purposeful walking or other activity that raises your breathing slightly? How many days do you perform any strength work (even bodyweight)?
- **Sleep and rhythm:** Over the last two weeks, how many nights have you had at least 7 hours in bed? Do you usually go to sleep and wake up within the same 60–90 minute window, or does timing drift several hours?
- **Nutrition:** How many main meals per day include a palm-sized portion of protein and at least one serving of vegetables or fruit? How often do you arrive at meals very hungry or graze late into the evening?
- **Stress and mood:** On a 0–10 scale, where 0 is "completely overwhelmed" and 10 is "generally calm and resilient", where would you place yourself most days? How often do you feel "wired and tired" at bedtime?
- **Red flags and diagnoses:** Have you ever been told you have heart disease, lung disease, diabetes, serious mental illness, or a specific mitochondrial or neuromuscular disorder? Have you experienced fainting, unexplained chest pain, or rapid mood shifts?

If your notes reveal major diagnoses or red flags, treat the later sections as background education and plan changes with your clinical team. If they do not, you can safely experiment with the basic progressions described in the roadmap while still looping your clinicians in as needed.

2 Mitochondria: A Brief Theory Refresher

This section revisits the core biology of mitochondria and cellular energy conversion at a level that is sufficient for the later practical sections. Readers who already know oxidative phosphorylation in detail can skim for terminology and the specific analogies used later.

2.1 Structure, Function, and Bioenergetic Basics

Mitochondria are descendants of bacteria that entered into a stable partnership with the ancestors of modern cells more than a billion years ago.[2] Each mitochondrion is enclosed by a smooth outer membrane and a highly folded inner membrane that forms narrow shelves known as cristae. The inner membrane houses an organised series of protein complexes, collectively called the electron transport chain, and a rotary enzyme called ATP synthase.

The basic job of this machinery is to harvest energy from reduced substrates such as nicotinamide adenine dinucleotide (NADH) and flavin adenine dinucleotide ($FADH_2$) and package it into ATP. Electrons flow "downhill" through complexes I to IV of the electron transport chain, ultimately reducing molecular oxygen to water. The free energy released by this flow is used to pump protons from the mitochondrial matrix across the inner membrane into the intermembrane space. This creates an electrochemical gradient: a difference in proton concentration and electrical potential between the two sides of the membrane.

British biochemist Peter Mitchell described this arrangement as a "chemiosmotic" mechanism: rather than being stored in a single chemical intermediate, energy is temporarily held in the separation of charges and concentrations across a membrane.[1] ATP synthase provides

a controlled leak in this barrier. Protons flow back down their gradient through the enzyme, causing part of it to rotate and catalyse the conversion of adenosine diphosphate (ADP) and inorganic phosphate into ATP.

For intuition, it is helpful to picture each mitochondrion as a miniature hydroelectric dam. The electron transport chain acts like pumps that move water (protons) uphill into a reservoir using the energy contained in fuels. The height of the reservoir relative to the valley below is the electrochemical gradient. ATP synthase is the turbine that lets water run back down in a carefully channelled way to spin a generator. If the pumps are weak, the dam wall is leaky, or the turbine is damaged, the same inflow of water produces much less useful electricity.

In living cells, mitochondrial "dams" are continuously adjusted. When ATP demand rises during exercise or intense mental work, ADP and inorganic phosphate accumulate in the matrix, which accelerates proton flow through ATP synthase. This in turn speeds up upstream electron transfer and fuel oxidation. When demand is low, the gradient builds up and the system idles at a slower pace. Signals from hormones, nutrients, and mechanical load tune this responsiveness over minutes to weeks.

Reactive oxygen species (ROS) are an inevitable by-product of this process. A small fraction of electrons leak prematurely from the electron transport chain and react with oxygen to form molecules such as superoxide and hydrogen peroxide. At controlled levels, these ROS act as signalling molecules that help trigger beneficial adaptations, including mitochondrial biogenesis (the creation of new mitochondria) after training. At chronically high levels, especially in the absence of adequate antioxidant defences, they can damage lipids, proteins, and mitochondrial deoxyribonucleic acid (DNA). The aim in practice is therefore not to eliminate ROS completely, but to keep production and clearance in a healthy balance.

A simplified schematic of these components is shown in Figure 1. It is not drawn to anatomical scale, but it captures the logic of fuel and oxygen entering, electrons driving proton pumping across the inner membrane, and adenosine triphosphate leaving to power the rest of the cell.

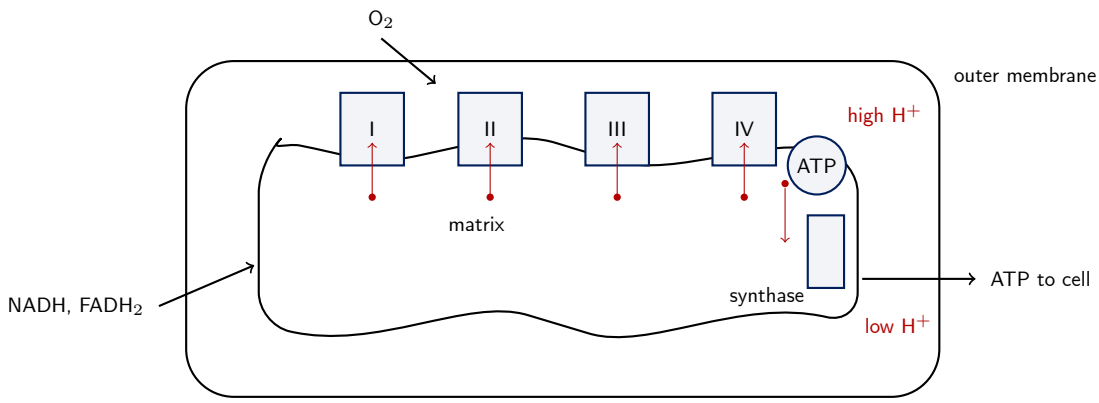

Figure 1: Schematic view of a mitochondrion as an "energy dam". Electrons from reduced substrates such as nicotinamide adenine dinucleotide (NADH) and flavin adenine dinucleotide ($FADH_2$) flow through complexes I–IV, pumping protons (H^+) across the inner membrane. The resulting electrochemical gradient drives adenosine triphosphate (ATP) synthase, which produces ATP for the rest of the cell. The diagram is illustrative rather than anatomically to scale.

A more hand-drawn sketch with the same logic, useful for presentations and teaching slides, is shown in Figure 2.

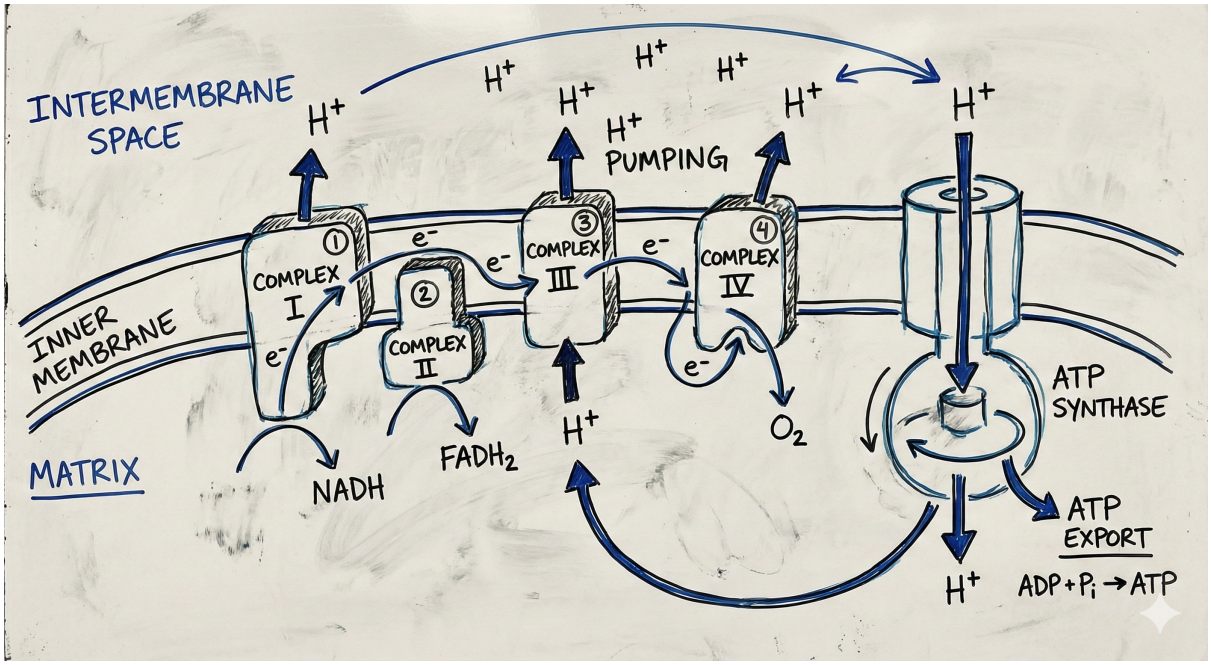

Figure 2: Hand-drawn style sketch of the same mitochondrial "energy dam" logic shown schematically in Figure 1. This version mirrors how the concept might appear in slides or whiteboard explanations, with complexes I–IV, proton (H^+) pumping, adenosine triphosphate (ATP) synthase, and ATP export all annotated explicitly.

2.2 Mitochondria Across Tissues and Lifespan

Real human bodies are not homogeneous test tubes. Different tissues contain very different numbers of mitochondria per cell and place very different demands on them. Cardiac muscle cells, which beat tens of thousands of times per day without pause, may devote more than a third of their volume to mitochondria. Slow-twitch skeletal muscle fibres that power posture and endurance work are similarly packed. By contrast, fast-twitch fibres used for brief, explosive contractions have fewer mitochondria and rely more heavily on glycolysis and phosphocreatine for short bursts of power.

The liver hosts a separate cluster of mitochondrial tasks, including detoxification, gluconeogenesis (the synthesis of glucose from non-carbohydrate sources), and management of lipid metabolism. Adipose tissue adds another twist: specialised brown and beige fat depots contain mitochondria with a protein called uncoupling protein 1 (UCP1) that allows protons to leak back across the inner membrane without driving ATP synthesis. The released energy shows up as heat, which is why brown fat is important for thermogenesis during cold exposure.[10]

The brain, although making up only about two percent of body mass, consumes roughly twenty percent of resting oxygen and glucose.[6] Neurons are highly dependent on mitochondrial ATP to maintain ion gradients across their membranes, recycle neurotransmitters, and support synaptic plasticity. Here, mitochondrial positioning within dendrites and axons matters as much as sheer numbers; tiny shifts in local energy supply can change how reliably signals propagate.

Across the lifespan, mitochondria are continually renewed and reshaped. New mitochondria are formed through mitochondrial biogenesis, a process orchestrated by transcriptional regulators such as peroxisome proliferator-activated receptor gamma coactivator 1-alpha (PGC-1α). Damaged mitochondria are removed via mitophagy, a specialised form of autophagy in which defective organelles are tagged and digested. Mitochondria also undergo fusion and fission events, joining and splitting to share contents and segregate damage.[4]

Endurance training is a classic stimulus for beneficial mitochondrial remodelling. Repeated bouts of aerobic exercise increase the activity of mitochondrial enzymes, the number of mi-

tochondria per muscle fibre, and the efficiency with which they use oxygen.[5] Well-designed training programmes also improve the coordination between the heart, lungs, and peripheral tissues, so that oxygen delivery better matches the enhanced capacity of the mitochondrial "dams".

Ageing, chronic overnutrition, physical inactivity, and persistent psychological stress tend to push in the opposite direction. Studies in humans and animals show declines in mitochondrial content and function with age, along with increased oxidative damage and less efficient mitophagy.[3] These trends are not destiny: people who remain physically active, sleep adequately, and avoid extreme metabolic stressors often preserve much more mitochondrial capacity into older age than their sedentary peers.

Finally, mitochondrial dysfunction is implicated in a wide range of diseases, including metabolic syndrome, type 2 diabetes, certain cardiomyopathies, and neurodegenerative disorders such as Parkinson's disease.[3, 7] This paper does not attempt a full clinical review, but the same principles that help a healthy person support mitochondrial resilience—progressive training, adequate recovery, and avoidance of unnecessary mitochondrial toxins—often appear as background recommendations in disease management as well. The crucial difference is that in clinical contexts they must be individualised and supervised.

Common Myths About Mitochondria

Popular articles often mix sound ideas with oversimplified or misleading claims. A few examples you may encounter:

- **"You must train fasted to build mitochondria."** Fasted training is one possible tool, but mitochondria adapt strongly to fed aerobic work as well. If fasting makes you feel shaky, obsessed with food, or unable to hit planned workloads, you will gain more by eating a simple meal or snack before training.
- **"High-intensity intervals are the only efficient way to improve mitochondrial function."** Intervals are powerful, but moderate continuous exercise and resistance training also drive substantial adaptations. If you dislike maximal efforts, you can still build impressive mitochondrial capacity through consistent, easier work.
- **"Supplements and NAD^+ boosters can replace exercise."** No oral supplement has yet been shown to reproduce the broad, systemic benefits of regular movement. At best, targeted compounds may add a small extra benefit on top of exercise, nutrition, sleep, and stress management.
- **"More biohacking is always better."** Adding cold plunges, sauna, fasting, and multiple supplements all at once makes it impossible to know what is helping or harming. A slower approach—changing one variable at a time and watching how you feel and perform—is safer and ultimately more informative.

Keeping these myths in mind can help you ignore fashionable but unhelpful advice and focus on the levers that matter most.

3 Mitochondria and Physical Performance

This section connects mitochondrial function to endurance, strength, power, and recovery.

3.1 Endurance Capacity and Fatigue

When most people think about "fitness" they implicitly mean how long they can sustain a given pace before their legs and lungs protest. From a mitochondrial perspective this is largely a question of how much oxygen the body can deliver to working muscle, how much of that oxygen mitochondria can use, and how much by-product (heat, protons, carbon dioxide) they can tolerate before performance has to drop.

Maximal oxygen uptake (VO_2 max) is a convenient summary of this system. It reflects the combined capacity of the heart, lungs, blood, and peripheral tissues to transport and consume oxygen. Training studies show that a large part of VO_2 max gains comes from increases in mitochondrial enzyme activity and capillary density within muscle fibres rather than from gigantic changes in heart size alone.[5] More and better-connected mitochondria allow a given volume of blood to be used more completely before it exits the muscle, which in turn supports higher sustainable workloads.

For practical performance, however, the point where lactate and related metabolites begin to accumulate quickly—the lactate or ventilatory threshold—usually matters more than laboratory VO_2 max. Athletes with dense, well-trained mitochondria can oxidise more pyruvate and fatty acids per unit time, producing fewer surplus protons for a given power output. The result is a rightward shift in the speed or wattage they can maintain before breathing becomes laboured and muscles feel "acidic", even if their absolute VO_2 max changes only modestly.

Fatigue models often distinguish between central factors in the brain and spinal cord and peripheral factors in the muscles themselves. Mitochondria sit squarely in the peripheral camp: if they are underpowered, local ATP levels fall more quickly, ion gradients across membranes drift, and contractile proteins cycle less efficiently. Yet central regulation is intertwined with this local state. The brain continuously samples afferent feedback about metabolite concentrations, temperature, and mechanical strain and adjusts perceived effort accordingly. When mitochondrial machinery is robust, that feedback is less threatening for a given task, and the brain allows a higher "governor setting" before pulling back.

Two simple examples illustrate this. A first-time marathon runner with modest mitochondrial fitness may find that pace which feels conversational for the first half becomes unsustainable in the final third of the race, despite stable heart rate and hydration. Their muscles are relying heavily on carbohydrate oxidation, depleting glycogen and accumulating metabolites faster than mitochondria can clear them. By contrast, a well-trained mountain guide working at the same absolute power output may rely more on fat oxidation and has greater local mitochondrial capacity, so the same environmental conditions are perceived as merely taxing rather than overwhelming. In both cases the subjective story—"I hit the wall" versus "It was long but steady"—is downstream of mitochondrial economics.

3.2 Strength, Power, and Recovery

At first glance, sports that last only a few seconds—heavy lifts, jumps, short sprints—seem too brief for mitochondria to matter. The immediate energy comes from stored adenosine triphosphate and phosphocreatine systems rather than from oxidative phosphorylation. Yet even in these settings mitochondrial health strongly shapes how many quality efforts an athlete can string together and how quickly they recover between them.

After a maximal sprint or heavy set of squats, phosphocreatine stores are partially depleted and contractile machinery is stressed. Restoring those stores and re-establishing normal ion gradients is an energy-intensive process that depends on mitochondrial ATP production in the minutes following the effort. Better-trained mitochondria resynthesise phosphocreatine more

quickly, which means that a footballer can repeat near-maximal sprints with less drop-off in speed and that a lifter can keep bar velocity high across multiple sets instead of grinding to a halt in the later ones.

Mitochondria are also intertwined with calcium handling inside muscle cells. Calcium ions trigger contraction when they are released from the sarcoplasmic reticulum and must be pumped back in between contractions. The pumps that perform this job are ATP-dependent. When mitochondrial supply is strained, calcium clearance slows, cross-bridges detach less efficiently, and muscles feel "heavy" or uncoordinated even if cardiovascular variables look acceptable. Over many training sessions, efficient calcium cycling reduces unnecessary mechanical strain and may lower injury risk.

Finally, recovery between days and across seasons is partly a mitochondrial story. Exercise creates micro-damage to muscle fibres and supporting connective tissue, along with transient inflammation and increases in reactive oxygen species. Well-functioning mitochondria help confine this stress: they generate enough ATP for repair processes, support antioxidant systems that neutralise excess radicals, and participate in the controlled removal of damaged components. Athletes with robust mitochondrial capacity can therefore tolerate higher training loads with less lingering soreness and fewer episodes of unexplained fatigue, while those with fragile mitochondrial systems are more likely to experience plateaus or recurrent "overreaching" when volume or intensity climbs.

4 Mitochondria and Mental Performance

This section examines how mitochondrial function in the brain relates to cognition, mood, and resilience.

4.1 Energy Demands of the Brain

Although the brain represents only about two percent of body mass, it accounts for roughly twenty percent of resting oxygen and glucose consumption.[6] Most of this energy does not go into dramatic spikes of activity but into the quiet work of maintaining ion gradients across neuronal membranes and resetting them after each action potential. In other words, a large fraction of thought is the energetically expensive act of being ready to think.

Mitochondria are unevenly distributed across brain regions and even within single neurons. Synapses—the junctions where neurons communicate—are especially energy hungry, and clusters of mitochondria often sit close to them to supply local ATP for vesicle recycling and receptor trafficking. When this support falters, synapses may become less reliable, leading to subtle failures of signal transmission that accumulate into noticeable problems with attention, working memory, or fine motor control.

From a performance standpoint it is useful to imagine each brain region having a limited "metabolic reserve": a cushion of extra mitochondrial capacity that can be mobilised when cognitive demand spikes. Acute stressors such as a night of poor sleep, jet lag, or an unexpectedly long focus block all draw down this reserve. In individuals with high mitochondrial fitness—thanks to regular physical activity, adequate nutrition, and sleep—the cushion is thicker. They can sustain demanding mental work for longer before experiencing classic signs of depletion such as word-finding difficulties, irritability, or an inability to resist distraction.

In contrast, people with chronically impaired mitochondrial function may find that even modest additional loads push them over the edge. Tasks that should feel routine, such as a two-hour planning meeting or concentrated writing session, instead produce a disproportionate "cognitive hangover". They may describe this as brain fog, though the underlying physiology often reflects a mix of reduced mitochondrial capacity, disrupted neurotransmitter recycling, and altered blood flow regulation. While these processes cannot be monitored directly outside

research settings, changes in day-to-day mental stamina often track with the same lifestyle interventions that improve physical endurance.

4.2 Mitochria, Mood, and Stress Resilience

Mitochondria influence not only how clearly we think but also how we feel. A growing body of work links mitochondrial dysfunction and oxidative stress to major depressive disorder, bipolar disorder, anxiety conditions, and several neurodegenerative diseases.[7] In some cases the mitochondria appear to be primary drivers of pathology; in others they sit in a feedback loop where psychological stress, inflammation, and metabolic problems gradually erode mitochondrial resilience, which in turn worsens mood and cognitive symptoms.

One connecting pathway is the stress-response system itself. Chronic elevation of glucocorticoids and catecholamines—the hormones associated with prolonged psychological stress and sleep curtailment—can impair mitochondrial biogenesis, increase reactive oxygen species production, and alter mitochondrial dynamics (fusion and fission). Over time this shifts the balance from flexible, adaptable networks of mitochondria towards more fragmented, less efficient ones. Subjectively, individuals may notice that their baseline mood drifts downwards, that it takes longer to "come down" after stressful events, and that they are more vulnerable to rumination or emotional reactivity.

On the positive side, many of the same interventions that improve cardiometabolic health also appear to support mood and stress resilience through mitochondrial routes. Regular aerobic and resistance training enhance mitochondrial enzyme activity and improve regulation of the hypothalamic–pituitary–adrenal axis, which can blunt excessive cortisol responses to everyday hassles. Practices such as moderate-intensity walking in natural environments, breathing exercises, or brief mindfulness sessions may not dramatically change mitochondrial numbers on their own, but they reduce the chronic sympathetic overdrive that otherwise chips away at mitochondrial function.

A useful mental model is that of a knowledge worker under persistent deadline pressure. At the beginning of a demanding project, they may manage long days with little exercise and erratic sleep, drawing heavily on both psychological coping skills and metabolic reserve. As weeks turn into months, however, mitochondrial capacity and stress-response systems are progressively taxed. Introducing even small, regular doses of movement and recovery—for example, three 30-minute brisk walks per week, a fixed lights-out time, and deliberate breaks away from screens—often produces outsized improvements in subjective energy and mood. These changes are not magic; they reflect giving mitochondria enough support and "off-duty" time to restore their ability to fuel both body and mind.

Everyday Signals of Mitochondrial Fitness

Laboratory tests and biopsies are not required to get a sense of how well your "energy dams" are working. Several everyday signals, tracked over weeks rather than days, provide surprisingly good insight:

- **Cardiorespiratory markers:** resting and submaximal heart rate trends, perceived exertion at standardised workloads, and how quickly breathing and heart rate settle after a familiar hill, interval, or climb of stairs.
- **Subjective energy patterns:** ratings of alertness across the day, susceptibility to mid-afternoon "crashes", and whether mentally demanding tasks feel sharply worse after poor sleep or heavy meals.
- **Simple field tests:** brisk walking pace over a known route, timed stair climbs with recovery heart rate, or the ability to hold a comfortable conversational pace while walking or jogging as low-tech proxies for mitochondrial capacity.

None of these metrics is diagnostic on its own, but taken together they offer a practical dashboard. Over time, gentle improvements in these signals are often a more meaningful indicator of mitochondrial progress than any single laboratory number.

5 Evidence-Based Ways to Enhance Mitochondrial Function

This core section organises proven or strongly supported methods for improving mitochondrial function, with emphasis on realistic routines and safety.

5.1 Exercise: Aerobic, Interval, and Strength Training

Exercise is the most reliable lever we have for improving mitochondrial function. Different training styles emphasise different aspects of the system, but all effective programs share two features: they create repeated, tolerable energy stress on muscles and the cardiovascular system, and they allow enough recovery for the machinery to rebuild stronger between bouts.

Moderate continuous aerobic training—for example, 30–45 minutes of brisk walking, easy running, or cycling performed at a conversational pace—provides a classic stimulus for mitochondrial biogenesis.[5] In this zone oxygen delivery roughly matches demand, so mitochondria can operate near their comfortable maximum without excessive metabolite build-up. Over weeks, enzymes involved in oxidative phosphorylation increase in activity, capillary networks expand, and the body becomes more efficient at using both fat and carbohydrate as fuels at submaximal intensities.

High-intensity interval training (HIIT) and sprint interval protocols push the system closer to its limits. Brief bouts of harder work—for instance, 1–4 minutes at a pace that would be unsustainable for much longer than the interval—interspersed with equal or slightly longer recovery periods create sharp oscillations in ATP demand and oxygen utilisation.[8] These fluctuations generate strong signals for mitochondrial adaptation and cardiorespiratory improvements, often with lower total time commitment than traditional endurance training. However, they are also more stressful and require a solid base of health and movement competence. A sensible progression is to first establish two to four weeks of regular moderate activity before adding one or two interval sessions per week.

Volume and frequency should match your starting point. If you have been mostly sedentary, you might begin with 10–15 minutes of walking on most days, gradually extending to 30–40 minutes and introducing gentle hills or short pick-ups. If you already run or cycle regularly, you may tolerate three to five sessions per week, mixing one longer easy outing, one threshold-

style session (for example, 3–4 blocks of 5–8 minutes at a "comfortably hard" effort), and shorter recovery runs. Progression need not be fancy: adding no more than about 10 percent per week to total duration or number of hard intervals is a robust rule of thumb as long as sleep and soreness remain reasonable.

Resistance training complements these endurance-oriented approaches by preserving or increasing muscle mass, improving insulin sensitivity, and maintaining joint function, especially in older adults. From a mitochondrial perspective, lifting weights or performing bodyweight exercises does not match steady aerobic work for sheer volume of oxidative stress, but it boosts local mitochondrial density in trained muscles and improves the capacity to store and use glycogen. Two or three weekly sessions covering major movement patterns (push, pull, hinge, squat, loaded carry) with moderate loads and 2–4 sets of 6–12 repetitions are sufficient for most non-athletes. When scheduled thoughtfully—for instance, pairing lifting with easier aerobic days—strength work supports, rather than competes with, the mitochondrial gains from endurance and interval training.

To give a visual sense of these differences, Figure 3 sketches a simplified comparison of relative mitochondrial and cardiorespiratory adaptations across three broad training styles. It emphasises that more than one route can lead to meaningful mitochondrial improvements and that choice should be guided by preferences, constraints, and medical status.

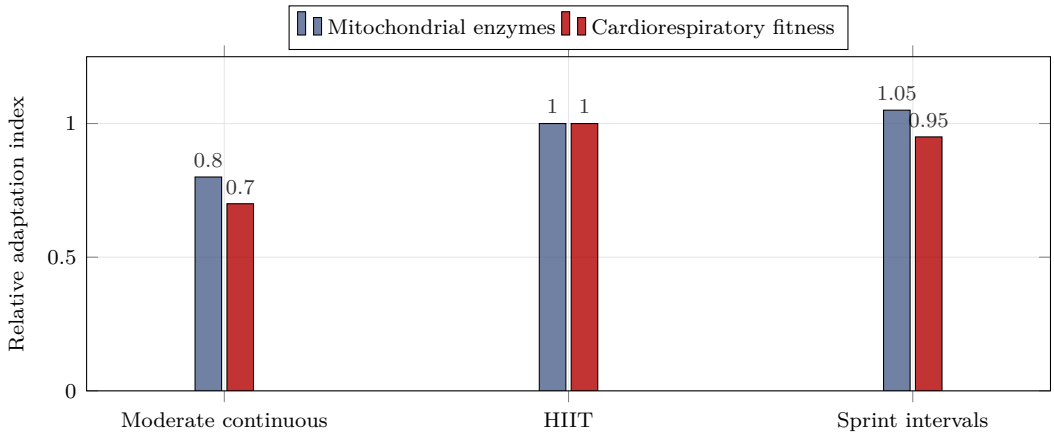

Figure 3: Illustrative comparison of relative mitochondrial and cardiorespiratory adaptations from different training modalities. Values are schematic indices summarising findings from short-term studies comparing moderate continuous training, high-intensity interval training (HIIT), and sprint interval protocols.[8] The figure is intended to highlight that multiple approaches can improve mitochondrial function, not to prescribe precise percentages.

5.2 Nutrition and Metabolic Flexibility

This subsection discusses nutritional patterns that support mitochondrial function without prescribing a single "perfect" diet.

Mitochondria are agnostic about diet labels. What they care about is the availability of appropriate fuels and cofactors at the right times. Metabolic flexibility—the ability to switch smoothly between carbohydrate and fat oxidation—is a useful organising concept. People with high flexibility can handle both a carbohydrate-rich meal and an overnight fast without large swings in energy or mood, whereas those with impaired flexibility often feel sluggish after heavy meals and uncomfortable after relatively short fasting windows.

Training itself improves metabolic flexibility by increasing mitochondrial content and enzyme capacity, but nutritional patterns can help or hinder this process. Most adults aiming to support mitochondrial health do well with regular protein intake (roughly 1.2–1.6 g per kilogram of body weight per day, higher in older or very active individuals) distributed across meals to

support muscle repair and mitochondrial proteins. Micronutrients such as iron, B-vitamins, magnesium, and certain trace elements act as cofactors in the electron transport chain and related pathways. Diets that chronically undersupply these—for example, through severe restriction of whole food groups or reliance on ultra-processed foods—can quietly undermine mitochondrial performance.[9]

Colourful plant foods contribute polyphenols and antioxidant compounds that modulate inflammatory signalling and help maintain redox balance. This does not mean chasing exotic "superfoods"; it simply argues for a varied mix of vegetables, fruits, legumes, nuts, and whole grains appropriate to cultural context and tolerances. For individuals following vegetarian or vegan patterns, attention to iron, vitamin B_{12}, and omega-3 fatty acid intake becomes particularly important, sometimes requiring supplementation discussed with a clinician.

Patterns such as time-restricted eating, intermittent fasting, or ketogenic diets can influence mitochondrial biogenesis and substrate use. Short daily fasting windows (for example, 12–14 hours overnight) that align with natural circadian rhythms may support metabolic health for many people when they arise organically from an early dinner and consistent bedtime. More aggressive strategies—multi-day fasts, very low-carbohydrate ketogenic diets, or extreme caloric restriction—have potential therapeutic roles in specific contexts (e.g., refractory epilepsy, research protocols for metabolic disease) but also carry risks: hypoglycaemia, nutrient deficiencies, hormonal disruption, and in some cases triggering of disordered-eating patterns. These approaches should therefore be reserved for situations where medical supervision is available and where foundational habits of movement, sleep, and basic diet quality are already in place.

5.3 Supplementation and Mitochondrial Support

Supplements occupy a tempting middle ground between lifestyle change and pharmaceuticals. Some compounds have plausible mechanisms and early supportive data for mitochondrial function, but their effects are generally modest compared with exercise, nutrition, and sleep, and product quality is highly variable.

Creatine, for example, supports the phosphocreatine buffering system that shuttles high-energy phosphate groups between mitochondria and working contractile proteins. In healthy adults it reliably increases strength and work capacity in resistance training programs and may provide small benefits for intermittent high-intensity efforts. There is also preliminary work suggesting cognitive benefits in sleep deprivation or vegetarian populations, though results are mixed. Coenzyme Q10 (ubiquinone/ubiquinol) participates directly in the electron transport chain and has shown benefits in certain mitochondrial disorders and some cases of heart failure, but routine use in otherwise healthy people is less well supported.

Other candidates include L-carnitine (involved in shuttling long-chain fatty acids into mitochondria), alpha-lipoic acid, and precursors of nicotinamide adenine dinucleotide (NAD^+) such as nicotinamide riboside or nicotinamide mononucleotide.[9] These compounds can influence mitochondrial redox status and signalling pathways in cell and animal models, yet human trial data are still evolving and often use doses, formulations, or populations that do not generalise to everyday practice.

Given these uncertainties, a pragmatic approach is to view supplementation as optional fine-tuning rather than a foundation. For most healthy individuals it makes sense to prioritise well-structured training, adequate protein and micronutrient intake from food, and consistent sleep before considering targeted supplements. When supplementation is pursued—for instance, creatine in strength athletes, CoQ10 in older adults with fatigue and cardiovascular disease, or NAD^+ precursors in research settings—it should be discussed with a clinician who can evaluate interactions with existing medications, pregnancy or fertility plans, and underlying metabolic conditions.

5.4 Sleep, Circadian Rhythms, and Stress Regulation

Here the focus is on "indirect" levers that strongly affect mitochondrial health. Sleep and circadian rhythms do not feature in traditional biochemical diagrams of oxidative phosphorylation, yet in real life they are among the most powerful determinants of how those pathways behave over weeks and years.

Sleep restriction and circadian misalignment (for example, rotating shift work, frequent jet lag, or erratic bedtimes) impair mitochondrial function in several ways. They increase sympathetic nervous system activity and cortisol levels, elevate inflammatory markers, and disrupt the timing of gene expression related to mitochondrial biogenesis and antioxidant defences. In animal and human studies, even a few nights of curtailed sleep can reduce insulin sensitivity and alter substrate use during exercise, nudging metabolism towards a less flexible, more carbohydrate-dependent profile.

Practical circadian anchors help reverse this trend. Regular exposure to bright light in the morning, consistent meal timing within a roughly 10–12-hour daytime window, and placing the bulk of vigorous exercise earlier rather than immediately before bedtime all signal to the body when "day" and "night" should occur. Most adults aiming for mitochondrial resilience benefit from treating 7–9 hours of opportunity for sleep as a non-negotiable training parameter rather than a luxury. When this window is protected, improvements in exercise capacity, appetite regulation, and mood often follow without any change in formal workouts.

Stress-management practices further support mitochondria by damping unnecessary sympathetic arousal. Short, simple tools—slow breathing drills, brief mindfulness or prayer sessions, time in nature, or regular unstructured social contact—do not need to feel like elaborate rituals. Their value lies in providing repeated signals that the environment is safe enough to shift from "fight-or-flight" into "rest-and-repair" modes where mitochondrial maintenance, mitophagy, and biogenesis are prioritised. For individuals with trauma histories or severe anxiety, structured psychological therapies may be necessary to unlock these benefits, again highlighting the importance of professional support rather than self-help alone.

5.5 Temperature Exposure and Other Emerging Tools

Cold and heat exposure have become popular as potential shortcuts to metabolic health. From a mitochondrial viewpoint, they are best understood as specialised forms of stress that, when applied judiciously, may nudge the system towards greater capacity but can backfire when overused or applied to the wrong people.

Cold exposure activates brown and beige adipose tissue, which contain mitochondria that express uncoupling protein 1 (UCP1). This protein allows protons to leak back across the inner mitochondrial membrane without driving ATP synthesis, releasing energy as heat instead. Repeated mild cold stimuli—for example, regular outdoor walks in cool weather or brief cool showers—may increase brown fat activity and improve insulin sensitivity in some individuals.[10] However, sudden immersion in very cold water, especially in unsupervised open-water settings, poses clear risks for people with cardiovascular disease or arrhythmias and is unnecessary for you to obtain potential mitochondrial benefits.

Heat exposure, particularly in the form of sauna or hot baths, can transiently raise heart rate and core temperature in ways that resemble low-intensity exercise. Observational data link regular sauna use to reduced cardiovascular and all-cause mortality, and animal work suggests that heat shock proteins induced by such exposure may support mitochondrial biogenesis and protein quality control. These findings are encouraging but not definitive; as with cold exposure, gradual acclimation and attention to hydration, blood pressure, and existing medical conditions are essential.

Beyond temperature, a growing list of pharmacological or experimental tools—from metabolic uncouplers to senolytics and mitochondrial-targeted antioxidants—aims to tune mitochondrial

function more directly. At present these belong in research settings, not general wellness practice. Doses, long-term safety, and interactions with other medications are incompletely understood, and short-term gains could come at the expense of delayed harm. For your own program, it is more fruitful to view cold and heat as optional spices added to the core "meal" of exercise, nutrition, sleep, and stress management rather than as main ingredients.

5.6 Putting It Together: Example Weekly Plans

To make the previous subsections more concrete, it is helpful to see how a week might look for different starting points. These are not prescriptions but templates you can adapt.

1. Sedentary desk worker in their 40s. Your main goal is to establish regular movement and sleep without overwhelming an already busy life.

- *Movement:* five days per week of 20–30 minutes brisk walking (or equivalent cycling), plus one short strength session at home (for example, 2–3 sets each of bodyweight squats, wall push-ups, hip hinges, and a simple core exercise).
- *Sleep and rhythm:* fixed wake time on all days, aiming for lights out 7.5–8 hours earlier; 10 minutes of low-light wind-down (stretching, reading, or breathing drills) before bed.
- *Nutrition:* one extra serving of vegetables at lunch and dinner, protein included in all main meals, and a gentle rule of "kitchen closed" 2 hours before bedtime.
- *Stress:* one 10–15 minute walk outdoors during daylight on workdays, phone left behind, treating it as a mini-reset rather than fitness.

2. Recreational endurance athlete. You already train 3–5 times per week and want to improve mitochondrial capacity without overtraining.

- *Movement:* one longer easy session (60–90 minutes), one threshold-style workout (for example, 3–4 $\times$ 8 minutes at "comfortably hard" with equal easy recovery), one short interval session (6–8 $\times$ 1 minute fast / 1–2 minutes easy), and one or two 30–45 minute easy sessions. Add two short strength sessions focusing on heavy but controlled compound lifts or challenging bodyweight variations.
- *Sleep and rhythm:* 7.5–9 hours in bed, with at least one low-load day every 7–10 days where you either rest fully or do only an easy walk or mobility work.
- *Nutrition:* modest carbohydrate before and after harder sessions, adequate daily protein, and attention to iron and overall energy intake so you are not chronically in deficit.
- *Extras:* optional sauna or contrasting showers once or twice per week on easier days, introduced gradually and discontinued if sleep or recovery worsens.

3. Time-pressed parent or caregiver. Here the main constraint is fragmented time and unpredictable disruptions.

- *Movement:* three 20–30 minute "movement snacks" per week that combine brisk walking with simple strength work (for example, alternating 5 minutes of fast walking with a short circuit of squats, push-ups against a counter, and rows with resistance bands). Add opportunistic micro-bouts such as taking stairs or playing physically with children.
- *Sleep and rhythm:* a consistent wind-down ritual that you can perform even when bedtime shifts (for example, dimming lights, turning off screens, and three minutes of slow breathing).

- *Nutrition:* preparing a small set of default meals and snacks that are quick, high in protein and fibre, and compatible with your household so you are less reliant on last-minute takeaways.
- *Stress:* choosing one short practice that fits your life—for instance, a brief gratitude note before bed or a 5-minute walk after particularly stressful interactions—and treating it as non-negotiable training for your nervous system.

You can treat these outlines as starting sketches. Begin with the elements that feel most achievable, adjust for your health status and preferences, and then evolve the plan in light of the monitoring tools and safeguards described next.

Intervention Design Checklist

You can use the following checklist to turn the previous subsections into a concrete plan rather than a collection of ideas.

- Identify your current training status, constraints, and any medical red flags, ideally in collaboration with a professional where needed.
- Choose one primary and one secondary lever (e.g., a walking program plus sleep regularity) to adjust over the next 4–8 weeks instead of trying to change everything at once.
- Define simple, measurable process metrics (sessions per week, step counts, bedtime consistency) and outcome signals (subjective energy, performance markers) so you know whether the plan is being followed and whether it is helping.
- Schedule review points, lighter weeks, and clear criteria for seeking medical or specialist input if unexpected symptoms emerge or existing conditions worsen.

Tracking Your Progress Without a Lab

You do not need sophisticated devices to see whether your mitochondria are keeping up with training and life. A few simple measures, tracked over time, go a long way:

- **Resting heart rate:** measure your pulse or watch-derived resting heart rate several mornings per week after waking. A slow drift downwards over months usually reflects improved cardiorespiratory fitness; a sudden jump of 5–10 beats per minute that persists for a week can signal that you need more rest, food, or stress management.
- **Heart rate and effort on a standard route:** choose a familiar walk, run, or cycle loop of 10–30 minutes. Every week or two, record how hard it feels (for example, on a 1–10 effort scale) and, if available, your average heart rate. Being able to complete the loop at the same or lower effort with a slightly lower heart rate is a practical sign of mitochondrial improvement.
- **Sleep duration and quality:** jot down approximate sleep time and a 1–5 rating of how restored you feel on waking. Consistently poor ratings or shrinking sleep windows are reasons to adjust training, evening habits, or both.
- **Daytime energy and mood:** once per day, rate your overall energy and mood on a simple 1–10 scale. Look for trends rather than single days; if energy and mood slide for more than a week while training load is rising, it is usually wise to pause progression.
- **Recovery between similar sessions:** notice how quickly your breathing and heart rate settle after a familiar hill or interval. If recovery is slowing despite similar or lighter workloads, explore whether sleep, nutrition, or stress have changed before assuming you simply need to push harder.

Used together, these markers act as a dashboard. They will never be perfect, but they are more than precise enough to guide safe adjustments and to show you that seemingly small habits are adding up.

6 Safeguards, Edge Cases, and Professional Support

This section gathers caveats, edge cases, and guidance on when professional supervision is essential.

The interventions described so far are generally safe for healthy adults when introduced gradually, but there are important exceptions. You may live with diagnosed mitochondrial disease, complex cardiovascular or psychiatric conditions, or be taking medications that interact with exercise capacity, thermoregulation, or metabolism. In those situations, aggressive ramps in training volume, extreme diets, unsupervised fasting, or experimental supplements can do real harm.

Clear red flags for unsupervised experimentation include: unexplained syncope or near-fainting episodes; chest pain or significant breathlessness at low workloads; rapidly worsening mood, suicidality, or psychosis; poorly controlled diabetes or hypertension; pregnancy or early post-partum periods; and known mitochondrial or neuromuscular disorders. If any of these apply to you, substantial changes to training, diet, temperature exposure, or supplementation should be planned with clinicians who understand both the underlying diagnosis and your goals.

Table 1: Examples of conditions that warrant extra caution and the types of interventions you should only undertake with professional guidance. The list is illustrative, not exhaustive.

Condition or situation	Interventions to avoid unsupervised
Known cardiovascular disease (e.g., coronary artery disease, arrhythmias, heart failure)	High-intensity interval training, maximal strength testing, cold-water immersion, and very hot sauna sessions.
Uncontrolled hypertension or diabetes	Sudden large increases in training volume or intensity, prolonged fasting, and extreme low-carbohydrate diets.
Severe or unstable psychiatric illness (e.g., major depression with suicidality, bipolar disorder, psychosis)	Aggressive sleep restriction, unsupervised use of psychoactive supplements or drugs, and drastic training changes during mood episodes.
Pregnancy or early post-partum period	New high-impact or contact sports, heat extremes, and restrictive diets or fasting without obstetric input.
Diagnosed mitochondrial or neuromuscular disorders	Any strenuous new exercise or experimental supplement regimen without specialist consultation.

Special Situations and Populations

Certain life stages and work patterns change how practical it is to apply the recommendations in this paper. A few brief pointers:

- **Older adults:** You can gain mitochondrial capacity well into later decades, but joints, balance, and bone density deserve extra care. Prioritise strength and power work with safe movements (for example, sit-to-stand, step-ups, light loaded carries), keep progressions gentle, and discuss any sudden loss of function or unexplained weight loss with your clinician.

- **Perimenopausal and postmenopausal women:** Hormonal shifts can change how you tolerate heat, high-intensity efforts, and sleep disruption. Focusing on resistance training, moderate aerobic work, adequate protein and calcium, and consistent sleep often yields the largest benefits. Coordinate with your clinician about hormone therapy, bone health, and cardiovascular risk when adjusting training.

- **Shift workers:** Rotating schedules make textbook circadian advice difficult to follow. Emphasise protecting a core sleep block in the 24-hour cycle, using light and darkness strategically (bright light during your "day", blackout curtains and eye masks during your "night"), and scheduling the hardest training on stretches of relatively stable shifts rather than immediately after transitions.

- **People with chronic pain or fatigue syndromes:** For conditions such as fibromyalgia, chronic fatigue syndrome, or long COVID, pacing and symptom-guided progression are crucial. Very small, regular amounts of movement—sometimes only a few minutes at a time—may be all you can tolerate initially, and increases should be made cautiously in collaboration with knowledgeable clinicians.

Even if none of these conditions apply, collaboration with health professionals is still valuable. Bringing concise, structured information to appointments—a short summary of your current activity levels, sleep patterns, medications, and specific aims such as "walk 30 minutes most days without knee pain"—helps clinicians give more tailored advice. Sharing self-tracking data

(for example, heart-rate responses to standard walks, sleep logs, or symptom diaries) can reveal patterns that are otherwise invisible in brief consultations.

Finally, it is worth addressing two persistent misconceptions. The first is that more intensity is always better: if some intervals are good, then maximal efforts every day must be great. In reality, mitochondrial adaptations depend on an alternation between stress and recovery. Continual overload without rest eventually degrades sleep, immunity, and the very mitochondrial function you hope to improve. The second misconception is that supplements or devices can substitute for the unglamorous foundations of movement, nutrition, sleep, and stress management. Even when targeted pharmacological tools become safer and more effective, they will work best when layered onto a life that already supports, rather than sabotages, your existing cellular "power plants".

7 Roadmap, Outlook, and Research Gaps

The closing section pulls the threads together into a practical roadmap and then looks outward to questions that remain open. Throughout the article the central metaphor has been that of distributed "energy dams" or a power grid inside each cell. Mitochondria take in fuel and oxygen, build a gradient, and release energy in measured flows to power everything else the organism cares about. The key message is that this infrastructure is plastic: it can be strengthened, weakened, and reconfigured by everyday choices across months and years.

One way to translate that message into action is to sketch a gentle 12-week progression that prioritises consistency over heroics. For a relatively healthy but deconditioned adult, Weeks 1–4 might centre on establishing foundations: 10–20 minutes of brisk walking on most days, one or two short bouts of simple resistance exercises (for example, bodyweight squats, wall push-ups, hip hinges) each week, a regular sleep window, and modest improvements in diet quality such as adding one serving of vegetables to lunch and dinner. The goal is not dramatic fitness gains but proving to oneself that small, repeatable behaviours fit into real life.

Weeks 5–8 can then layer modest intensity and structure onto this base. Walking sessions might extend to 30–40 minutes, with one session per week including short hills or 3–5 repetitions of 1–2 minutes at a "comfortably hard" pace separated by easy periods. Resistance training can expand to two or three sessions covering major movement patterns with light weights or bands. On the recovery side, this phase is an opportunity to solidify circadian anchors (morning light, consistent meal timing) and to experiment with one or two stress-management tools that feel sustainable rather than burdensome.

Weeks 9–12 focus on consolidation and experimentation. If the earlier steps feel stable and there are no warning signs, you might add a second weekly interval-style session or a slightly longer weekend outing such as a hike or bike ride. Nutrition can shift from merely "better choices" towards specific targets for protein and fibre intake. If you are curious about colder showers, sauna, or carefully chosen supplements, you can, in consultation with clinicians, trial one variable at a time while monitoring sleep, mood, and performance. By the end of three months the target is not a particular VO_2 max number but a noticeably larger margin between daily demands and perceived energy.

From a research standpoint, much remains to be clarified. Sex-specific and age-specific responses to different training and nutritional strategies are still incompletely mapped. Long-term safety and efficacy data for many proposed mitochondrial enhancers—from NAD^+ precursors to pharmacological uncouplers and senolytics—are sparse. Interactions between psychological stress, social context, and mitochondrial biology are only beginning to be unravelled. Readers and practitioners should therefore treat the framework in this paper as a living model rather than a final answer: a way of organising current knowledge so that new evidence can be slotted in, tested against lived experience, and revised where needed.

The hopeful conclusion is that, despite these uncertainties, the broad strokes are stable.

Regular movement, adequate and enjoyable food, sufficient sleep, manageable stress, and wise use of temperature or pharmacological tools all converge on the same objective: keeping the cell's "energy dams" strong, responsive, and well regulated. For most people this is less about chasing exotic interventions and more about committing to a realistic, kind, but firm relationship with the habits that quietly shape mitochondrial life for decades.

Glossary and Acronyms

This brief glossary collects a few recurring terms so you can quickly remind yourself what they mean.

ATP (adenosine triphosphate) The main "energy currency" molecule in cells, produced largely by mitochondria and used to power processes such as muscle contraction and nerve signalling.

VO_2 max The maximum rate at which your body can use oxygen during intense exercise, often expressed in millilitres of oxygen per kilogram of body weight per minute; a summary measure of aerobic capacity.

Lactate threshold The exercise intensity at which lactate and related metabolites begin to accumulate quickly in the blood, usually corresponding to the highest pace you can sustain for 30–60 minutes.

Metabolic flexibility The ability to switch efficiently between carbohydrate and fat as fuel depending on context (for example, fed vs. fasted, easy vs. hard exercise).

Reactive oxygen species (ROS) Highly reactive oxygen-containing molecules produced as by-products of metabolism. At controlled levels they act as signalling molecules; in excess they can damage cellular structures.

Mitophagy A specialised form of autophagy in which damaged or dysfunctional mitochondria are selectively broken down and recycled.

Mitochondrial biogenesis The process by which cells create new mitochondria or increase the content of existing ones, often stimulated by repeated exercise.

PGC-1α A transcriptional coactivator (peroxisome proliferator-activated receptor gamma coactivator 1-alpha) that plays a central role in regulating mitochondrial biogenesis in response to exercise and other stimuli.

Brown adipose tissue A type of fat tissue rich in mitochondria that can generate heat by "uncoupling" oxidative phosphorylation, important for thermogenesis in response to cold.

HIIT (high-intensity interval training) Workouts consisting of repeated short bouts of relatively hard effort interspersed with recovery periods, used to improve both mitochondrial and cardiorespiratory function.

8 Disclaimer

This paper is provided for educational and informational purposes only. It does not constitute medical advice, diagnosis, or treatment, and it is not a substitute for individual consultation with a licensed physician or other qualified health professional. Mitochondria-targeted supplements can interact with medications and underlying conditions, and product quality varies between manufacturers. Discuss any supplement or exercise programme with a clinician first, particularly if you are pregnant, take prescription medication, or have a chronic condition.

Part of the evidence summarised here comes from cell and animal studies or small human trials; reported effects are averages that may not translate to individual outcomes. Interpret mechanisms and effect sizes as orientation for a professional conversation, not as personal prescriptions.

Seek medical care promptly for red-flag symptoms such as unexplained muscle pain or weakness, dark urine, chest pain, severe breathlessness, or fainting. To the maximum extent permitted by applicable law, the author accepts no liability for any injury, loss, or damage arising from the use or misuse of the information in this paper.

References

[1] P. Mitchell. "Coupling of phosphorylation to electron and hydrogen transfer by a chemiosmotic type of mechanism." *Nature*, 191:144–148, 1961. Available at nature.com.

[2] L. Margulis. *Origin of Eukaryotic Cells*. Yale University Press, 1970. Available at yalebooks.yale.edu.

[3] D. C. Wallace. "A mitochondrial paradigm of metabolic and degenerative diseases, aging, and cancer." *Annals of the New York Academy of Sciences*, 1040:11–20, 2005. Available at nyas.org.

[4] D. A. Hood, T. Uguccioni, and S. Vainshtein. "Mitochondrial biogenesis in skeletal muscle in response to exercise." *Applied Physiology, Nutrition, and Metabolism*, 34(3):465–472, 2009. Available at nrcresearchpress.com.

[5] J. O. Holloszy. "Biochemical adaptations in muscle. Effects of exercise on mitochondrial oxygen uptake and respiratory enzyme activity in skeletal muscle." *Journal of Biological Chemistry*, 242(9):2278–2282, 1967. Available at jbc.org.

[6] M. E. Raichle and D. A. Gusnard. "Appraising the brain's energy budget." *Proceedings of the National Academy of Sciences*, 99(16):10237–10239, 2002. Available at pnas.org.

[7] A. C. Andreazza and others. "Mitochondrial dysfunction in psychiatric disorders." *Nature Reviews Neuroscience*, 11(10):703–717, 2010. Available at nature.com.

[8] M. J. Gibala and others. "Short-term sprint interval versus traditional endurance training: similar initial adaptations in human skeletal muscle and exercise performance." *Journal of Physiology*, 575(3):901–911, 2006. Available at physoc.onlinelibrary.wiley.com.

[9] J. Y. Khan, R. A. Mason, and L. S. Parker. "Nicotinamide adenine dinucleotide metabolism and supplementation: implications for mitochondrial function." *Current Opinion in Clinical Nutrition and Metabolic Care*, 19(5):430–438, 2016. Available at journals.lww.com.

[10] A. M. Cypess and others. "Activation of human brown adipose tissue by cold exposure." *New England Journal of Medicine*, 360(15):1509–1517, 2009. Available at nejm.org.